OTIUM SoftRack™

USER MANUAL

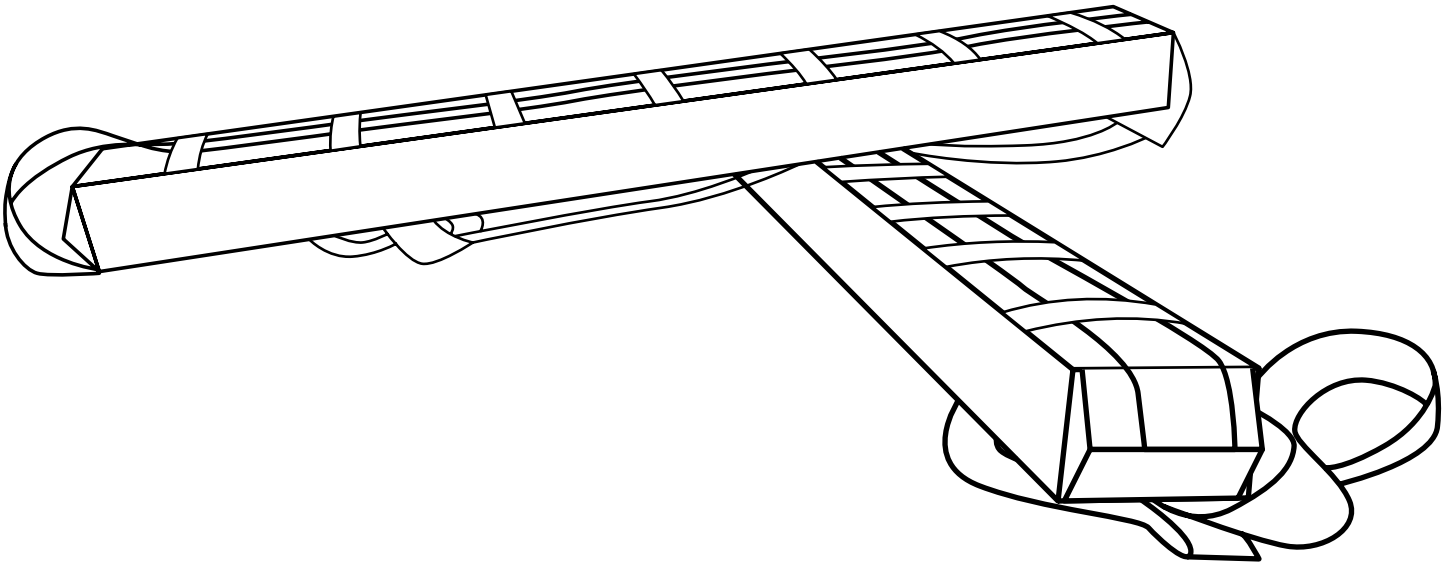

www.otiumoutdoors.com

IMPORTANT WARNING

IT IS CRITICAL THAT THE OTIUM SOFTRACK BE PROPERLY AND SECURELY ATTACHED TO YOUR VEHICLE. IMPROPER ATTACHMENT COULD RESULT IN AN AUTOMOBILE ACCIDENT, AND COULD CAUSE SERIOUS BODILY INJURY OR DEATH TO YOU OR TO OTHERS. YOU ARE RESPONSIBLE FOR SECURING THE RACKS AND ACCESSORIES TO YOUR CAR, CHECKING THE ATTACHMENTS PRIOR TO EACH USE, AND PERIODICALLY INSPECTING THE PRODUCTS FOR ADJUSTMENT, WEAR, AND DAMAGE. THEREFORE, YOU MUST READ AND UNDERSTAND ALL OF THE INSTRUCTIONS AND CAUTIONS SUPPLIED WITH YOUR OTIUM PRODUCT PRIOR TO INSTALLATION OR USE.

Use the Otium microfiber cloth provided to clean top of vehicle

- This should be done each time the SoftRack is used

1

Place blocks on top of vehicle

- Blocks should be placed directly above door frames
- Open all car doors

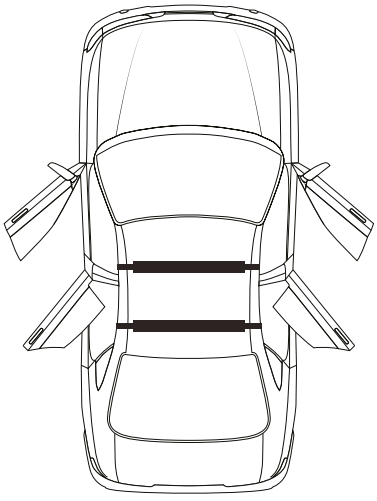

2

Remove straps

- The end of the strap without the buckle attached should be pulled through the security loops sewn onto the blocks

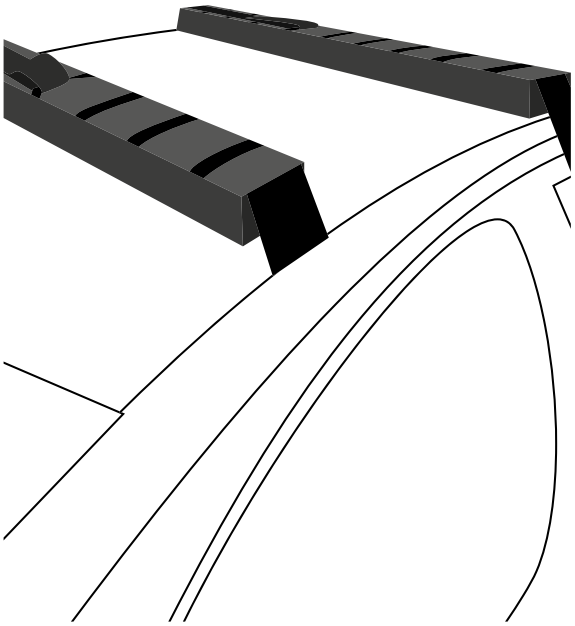

3

Place gear on blocks

- Gear should be centered both horizontally and vertically
- Insert straps through security loops utilizing as many of the nine loops as possible

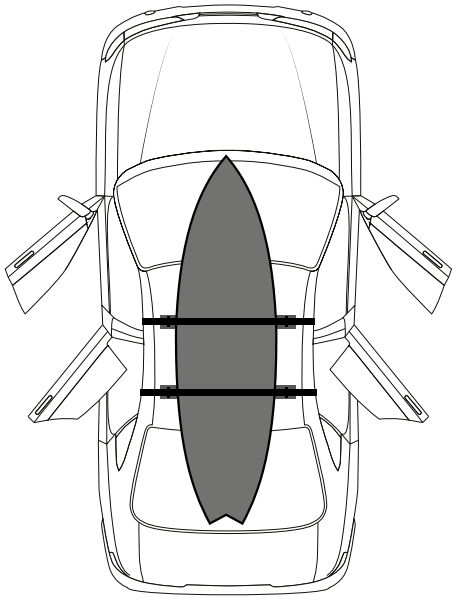

4

Tighten straps inside the vehicle using metal locking device

- Pull tightly
- Straps should go through top of vehicle and door frame
- Insert strap through both buckles then flip strap over one buckle and through the second creating a locked position

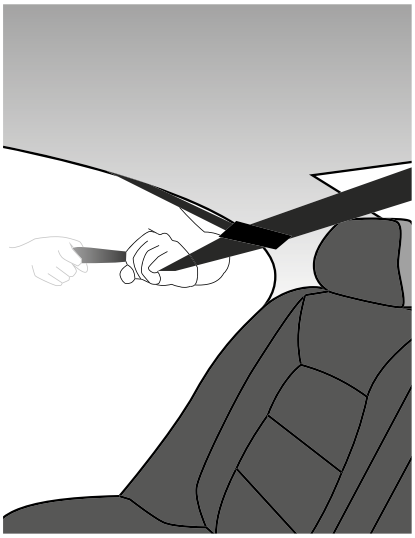

5

Use the included Otium Velcro loops to hold excess straps in place

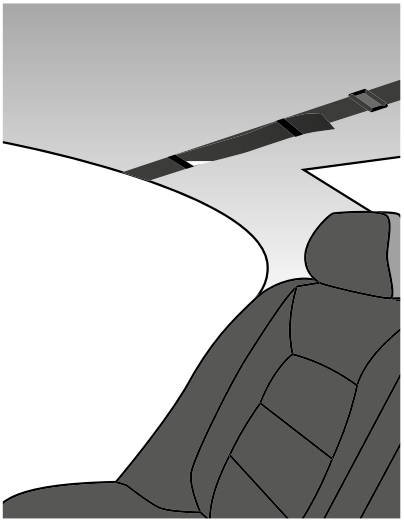

CAUTION: DO NOT USE IF ANY PART OF THE STRAP INTERFERES WITH OPERATING THE VEHICLE

6

PLEASE READ THE FOLLOWING BEFORE PROCEEDING

USE CAUTION WHEN OPENING REAR HATCH. SOME LONGER LOADS MAY PREVENT HATCH FROM FULLY OPENING.

SUN ROOF MAY INTERFERE WITH RACK. USE CAUTION WHEN OPERATING.

REMOVE RACKS BEFORE ENTERING AUTOMATIC CAR WASH.

ANTENNA MAY NEED TO BE REMOVED TO PREVENT INTERFERENCE WITH THE RACK OR LONG LOADS.

DO NOT USE WITH TWO DOOR VEHICLES.

OTIUM™ SOFTRACK™ GUIDELINES

- When using the Otium SoftRack™, the user must understand the precautions. The points listed below will assist you in safetly using the rack system.
- Unless stated otherwise in these instructions, do not carry more than 75 kg (165 lbs.) on the Otium SoftRack. The SoftRack does not increase gutter or roof strength. The user must always refer to roof strength provided by the manufacturer of vehicle.
- Always make sure all doors are open when attaching the SoftRack. Make sure all straps are firmly secured and tightened before every trip. Straps, D-Rings, and pads must be periodically inspected for signs of wear, corrosion, and fatigue. Check your load at stops during the trip to ensure continued fastening security.
- Check local and state laws governing projection of objects beyond the perimeter of a vehicle. Be aware of the width and height of your cargo since low clearance branches, bridges, and parking garages can affect the load. All cargo will affect the vehicle's driving behavior. Never drive with any rack or D-ring in an open or loosened position. All long loads such as, but not limited to, sailboards, surfboards, kayaks, canoes, and lumber must be tied down front and rear to the bumpers or tow hooks of the vehicle.
- Remove your Otium SoftRack and accessories when they are not in use and before entering automatic car washes.
- Remove valuable gear if your vehicle is unattended for an extended period. Otium racks are not designed to deter vandalism and theft. Remove the Otium SoftRack when not in use.
- For safety to your vehicle and rack obey all posted speed limits and traffic cautions. Adapt your speed to the conditions of the road and the load being carried. Do not exceed speeds over 65 mph while using the Otium SoftRack.
- Do not use the Otium SoftRack and accessories for purposes other than those for which they were designed. Do not exceed the stated carrying capacity. Failure to follow these guidelines or the product's instructions will void the warranty.
- All loads must be secured using the provided straps.
- Consult with your Otium dealer if you have any questions regarding the operation and limits of Otium products. Review all instructions and warranty information carefully.
- Not for use on trailers or towed vehicles.
- Not for off-road use.
- Do not use on convertibles, vehicles with a soft top, or vehicles with only two doors.



OTIUM SOFTRACK 3 YEAR WARRANTY (EFFECTIVE MAY 1, 2015)

The Otium SoftRack is warrantied against defects in material and workmanship for 3 years after the original purchase. This warranty applies only to the original owner.

Subject to the limitations and exclusions described in this warranty, Otium will remedy defects in materials or workmanship by repairing or replacing, at its option, a defective product without charge for parts or labor.

No warranty is given for defects caused by normal wear and tear, cosmetic rust, scratches, accidents, unlawful vehicle operation, or modification of, or any types of repair of, a load carrier system other than those authorized by Otium.

No warranty is given for defects resulting from conditions beyond Otium's control including, but not limited to, misuse, overloading, or failure to assemble, mount or use the product in accordance with Otium's written instructions or guidelines included with the product or made available to the purchaser.

No warranty is given for Otium's products purchased outside of the United States.

Damaged products must be returned directly to Otium Outdoors, in original box or adequate cardboard packaging, freight prepaid. To obtain an RMA (Return Materials Authorization) number, contact the Otium team at support@otiumoutdoors.com. Please include a copy of original sales receipt and the RMA number with the returned product.

DISCLAIMER OF LIABILITY

REPAIR OR REPLACEMENT OF A DEFECTIVE PRODUCT OR THE ISSUANCE OF A REFUND OR CREDIT (AS DETERMINED BY OTIUM) IS A PURCHASER'S EXCLUSIVE REMEDY UNDER THIS WARRANTY. DAMAGE TO A PURCHASER'S VEHICLE, CARGO AND/OR TO ANY OTHER PERSON OR PROPERTY IS EXCLUDED.

THIS WARRANTY IS EXPRESSLY MADE IN LIEU OF ANY AND ALL OTHER WARRANTIES, EXPRESS OR IMPLIED, INCLUDING THE WARRANTIES OF MERCHANTABILITY AND FITNESS FOR A PARTICULAR PURPOSE.

OTIUM'S SOLE LIABILITY TO ANY PURCHASER IS LIMITED TO THE REMEDY SET FORTH ABOVE. IN NO EVENT WILL OTIUM BE LIABLE FOR ANY LOST PROFITS, LOST SALES, OR FOR ANY CONSEQUENTIAL, DIRECT, INDIRECT, INCIDENTAL, SPECIAL, EXEMPLARY, OR PUNITIVE DAMAGES OR FOR ANY OTHER DAMAGES OF ANY KIND OR NATURE.

SOME STATES DO NOT ALLOW THE EXCLUSION OR LIMITATION OF INCIDENTAL OR CONSEQUENTIAL DAMAGES, SO THE ABOVE LIMITATIONS MAY NOT BE APPLICABLE.

THIS WARRANTY GIVES YOU SPECIFIC LEGAL RIGHTS, AND YOU MAY ALSO HAVE OTHER RIGHTS, WHICH VARY FROM STATE TO STATE.